Metal Gasket Face-Seal Fittings

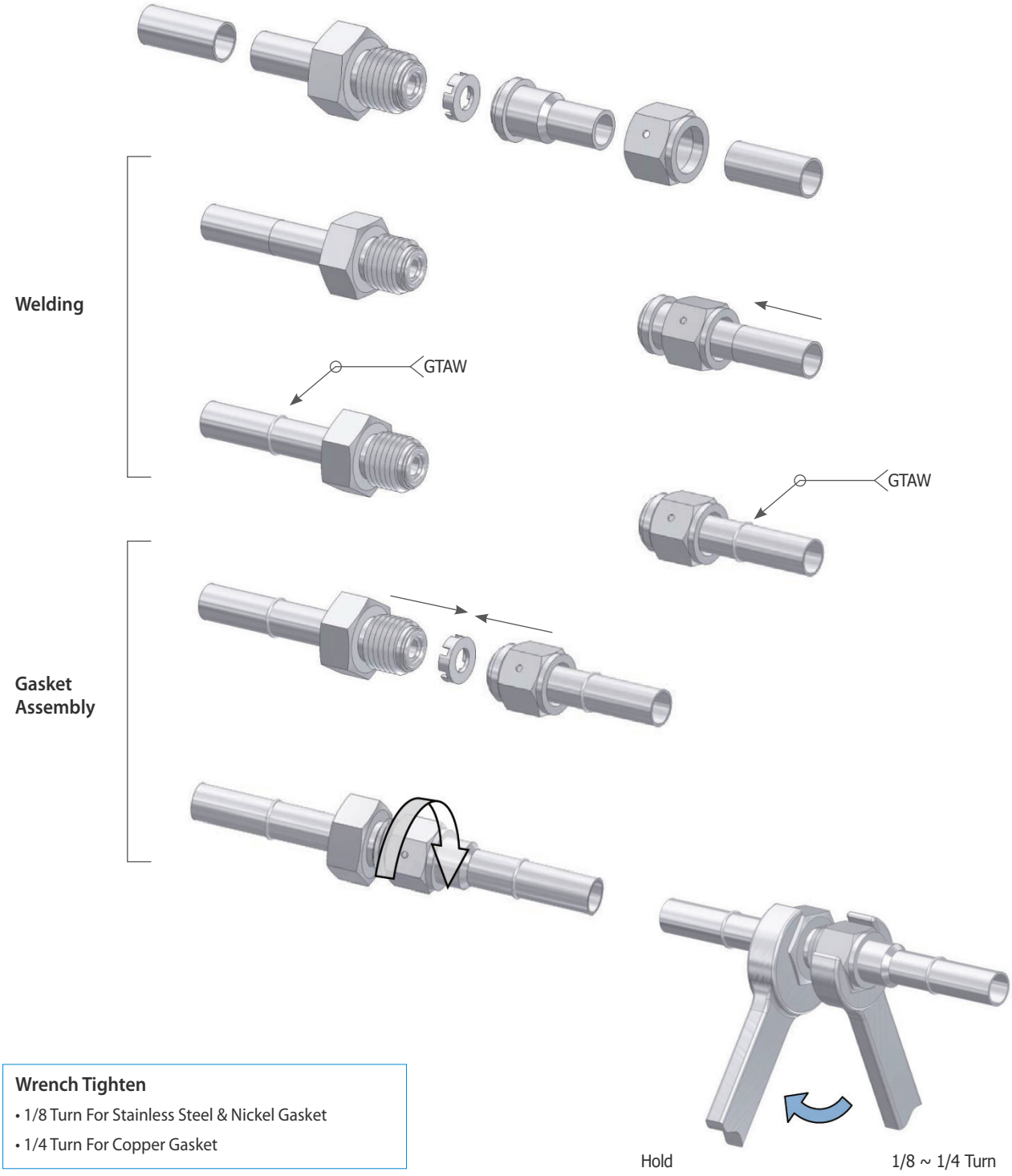

Wrench Tighten

- 1/8 Turn For Stainless Steel & Nickel Gasket
- 1/4 Turn For Copper Gasket